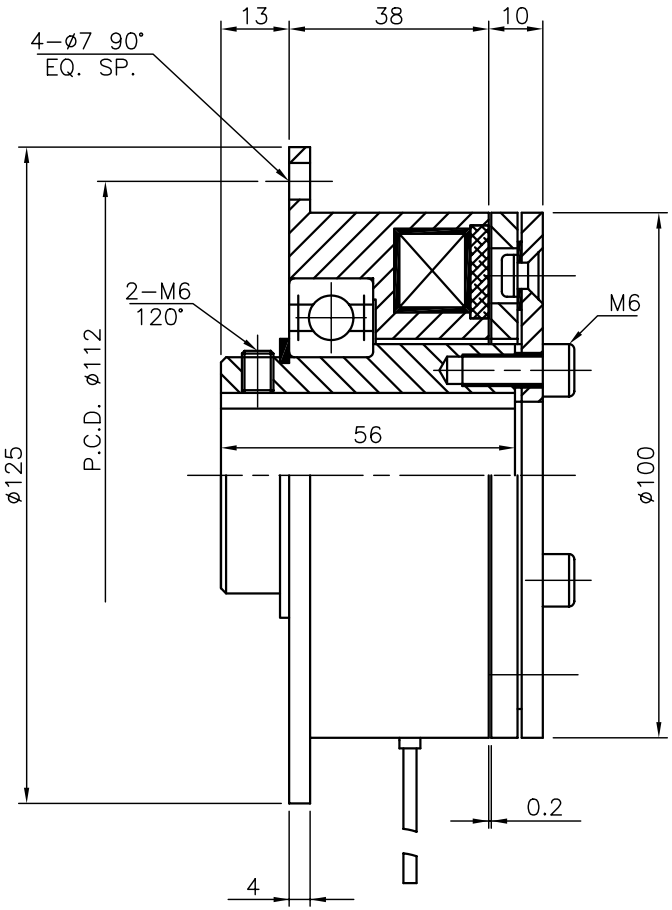

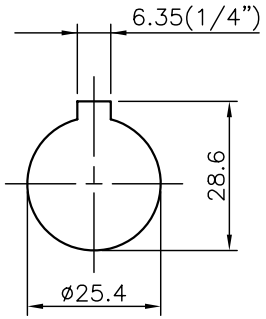

BORE, KEYWAY

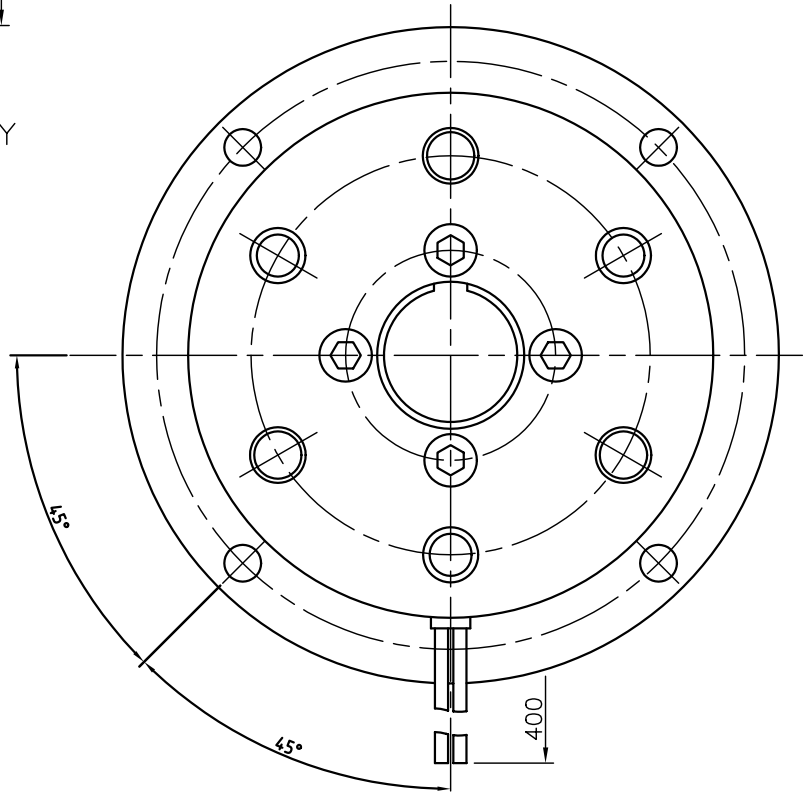

STATIC TORQUE: 2.5 KG–M
RATED VOLTAGE: D.C. 95 V.
RATED POWER: 25 WATTS

REV.	DESCRIPTION	DATE	FINISH		DRAWN		2–16–04	TITLE	MATERIAL
			NEW TORQUE, INC. 1-800-966-8325		CHECKED			SHAFT MOUNTED BRAKE MODEL: 01120 95VDC	DWG NO. 01120
					SCALE 1:1	UNITS	MM		